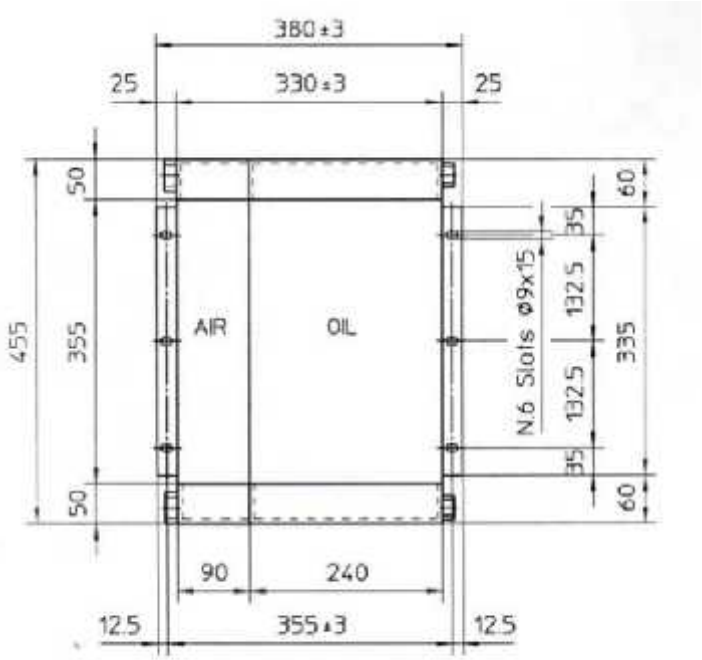

SPECIFICATION		OIL/Air after cooler
Order number		CC01
Technical data(Standard values)		
Compressor driving power	KW/HP	4/5.5/7.5
Oil cooling power	KW	3.5/6.2
Air cooling power	KW	0.6/1.1
Oil flow	Lit/min	12/20
Air flow	Nm^3/min	0.6/1.2
Cooling Air flow	Kg/hr	850/1550
Approximate cooler dimensions		
Max working pressure	bar(g)/psig	26
Test Pressure	bar(g)/psig	40
Cooler weight approx.	Kg/lb	8.7
Fan speed	rpm	1400/2850
Fan diameter	mm/inch	250
Oil inlet temperature	°C/°F	Max 100
Air inlet temperature	°C/°F	Max 100
Ambient temperature	°C/°F	Max 45

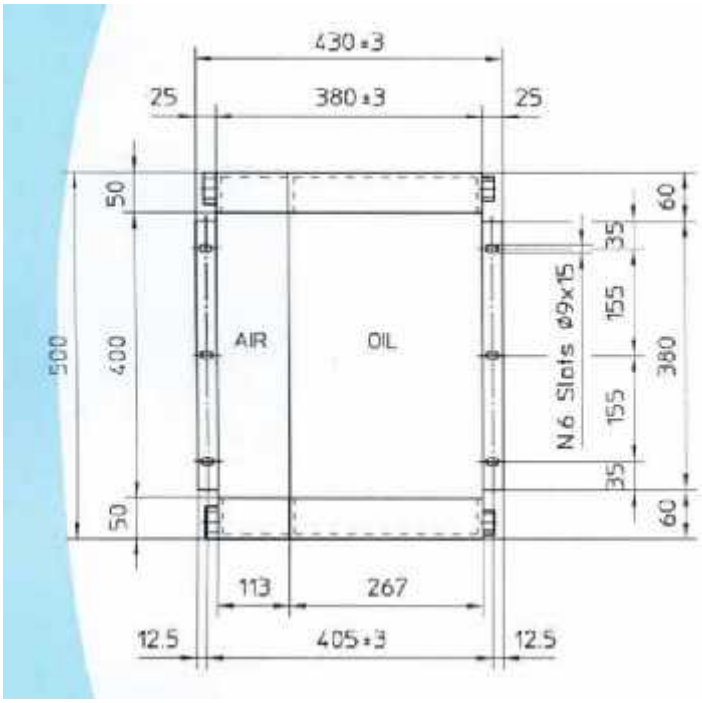

SPECIFICATION		OIL/Air after cooler
Order number		CC02
Technical data(Standard values)		
Compressor driving power	KW/HP	7.5/11/15
Oil cooling power	KW	6.2/12.5
Air cooling power	KW	1.1/2.2
Oil flow	Lit/min	20/28
Air flow	Nm^3/min	1.2/2.5
Cooling Air flow	Kg/hr	850/1550
Approximate cooler dimensions		
Max working pressure	bar(g)/psig	26
Test Pressure	bar(g)/psig	40
Cooler weight approx.	Kg/lb	10.8
Fan speed	rpm	1390/2800
Fan diameter	mm/inch	300
Oil inlet temperature	°C/°F	Max 100
Air inlet temperature	°C/°F	Max 100
Ambient temperature	°C/°F	Max 45

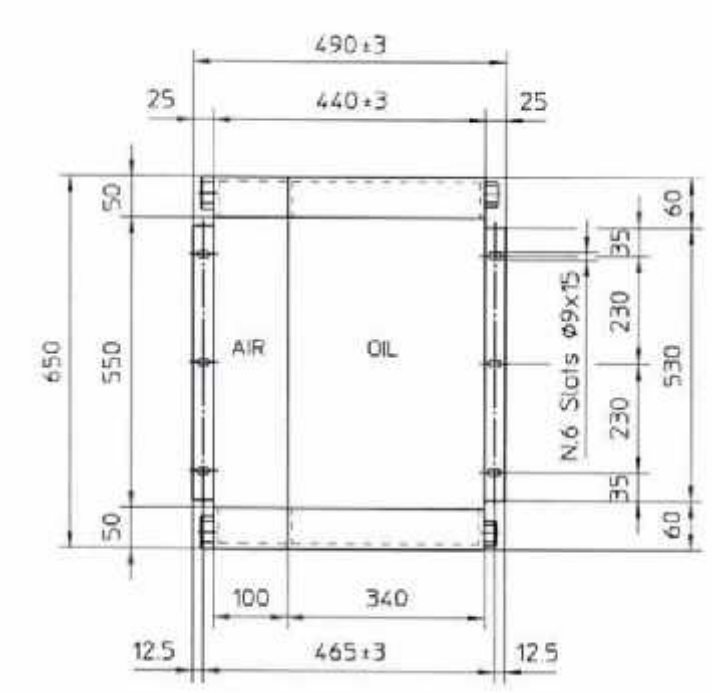

SPECIFICATION		OIL/Air after cooler
Order number		CC03
Technical data(Standard values)		
Compressor driving power	KW/HP	18/22
Oil cooling power	KW	15.6/18.7
Air cooling power	KW	2.7/3.2
Oil flow	Lit/min	33/40
Air flow	Nm^3/min	2.9/3.6
Cooling Air flow	Kg/hr	3,400
Approximate cooler dimensions		
Max working pressure	bar(g)/psig	26
Test Pressure	bar(g)/psig	40
Cooler weight approx.	Kg/lb	15.4
Fan speed	rpm	1390
Fan diameter	mm/inch	400
Oil inlet temperature	°C/°F	Max 100
Air inlet temperature	°C/°F	Max 100
Ambient temperature	°C/°F	Max 45

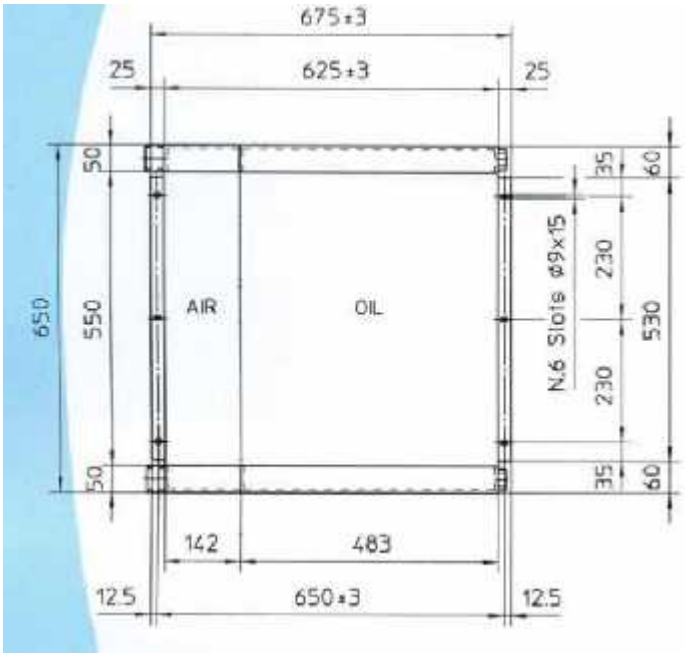

SPECIFICATION		OIL/Air after cooler
Order number		CC04
Technical data(Standard values)		
Compressor driving power	KW/HP	30
Oil cooling power	KW	25
Air cooling power	KW	4.3
Oil flow	Lit/min	45
Air flow	Nm^3/min	4.8
Cooling Air flow	Kg/hr	5,100
Approximate cooler dimensions		
Max working pressure	bar(g)/psig	26
Test Pressure	bar(g)/psig	40
Cooler weight approx.	Kg/lb	21
Fan speed	rpm	900
Fan diameter	mm/inch	500
Oil inlet temperature	°C/°F	Max 100
Air inlet temperature	°C/°F	Max 100
Ambient temperature	°C/°F	Max 45

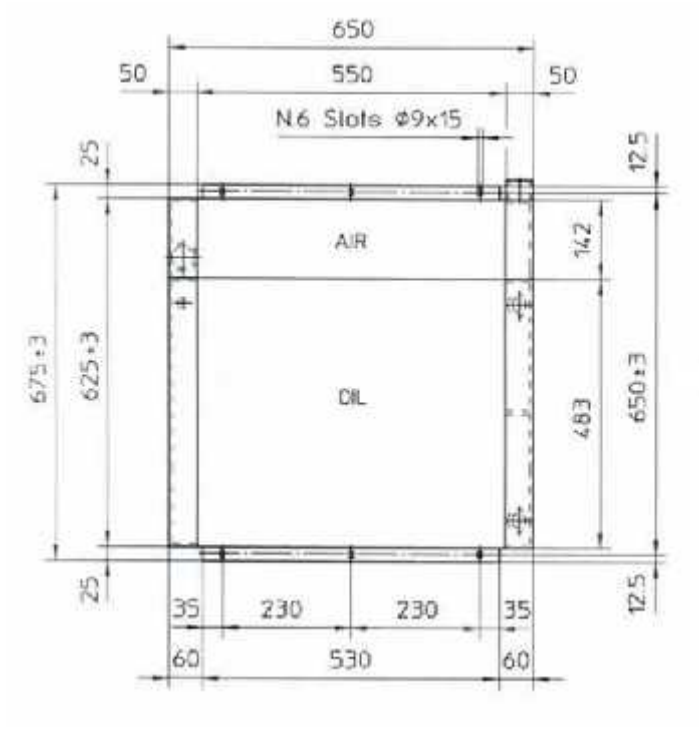

SPECIFICATION		OIL/Air after cooler
Order number		CC05
Technical data(Standard values)		
Compressor driving power	KW/HP	37
Oil cooling power	KW	30
Air cooling power	KW	6
Oil flow	Lit/min	43
Air flow	Nm^3/min	5.6
Cooling Air flow	Kg/hr	6,700
Approximate cooler dimensions		
Max working pressure	bar(g)/psig	26
Test Pressure	bar(g)/psig	40
Cooler weight approx.	Kg/lb	21
Fan speed	rpm	1400
Fan diameter	mm/inch	500
Oil inlet temperature	°C/°F	Max 100
Air inlet temperature	°C/°F	Max 100
Ambient temperature	°C/°F	Max 45

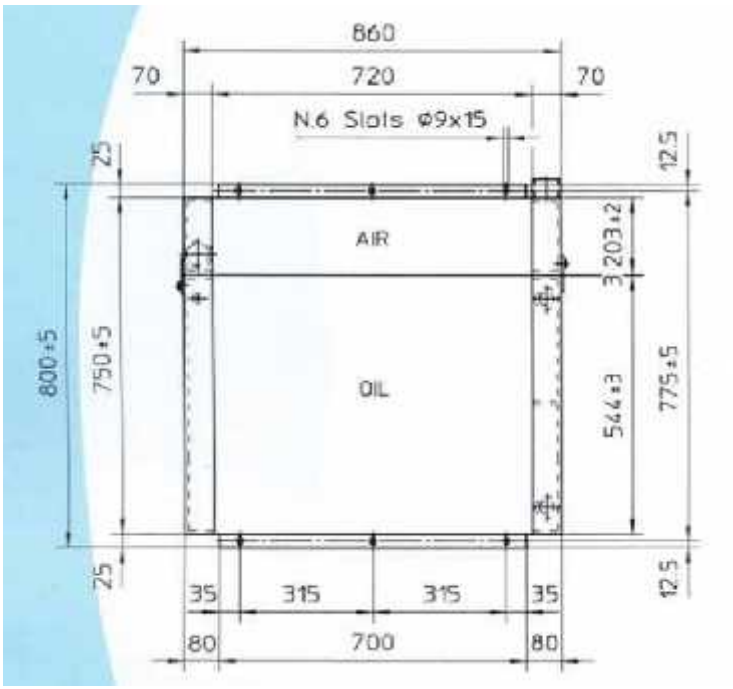

SPECIFICATION		OIL/Air after cooler
Order number		CC06
Technical data(Standard values)		
Compressor (	KW/HP	45/55
Oil cooling p	KW	38/47
Air cooling p	KW	7/8
Oil flow	Lit/min	45/60
Air flow	Nm³/min	6.3/7.1
Cooling Air f	Kg/hr	8,100
Approximate cooler dimensions		
Max working	bar(g)/psig	26
Test Pressure	bar(g)/psig	40
Cooler weigh	Kg/lb	56.7
Fan speed	rpm	1400
Fan diameter	mm/inch	560
Oil inlet temp	°C/°F	Max 100
Air inlet temp	°C/°F	Max 100
Ambient tem	°C/°F	Max 45

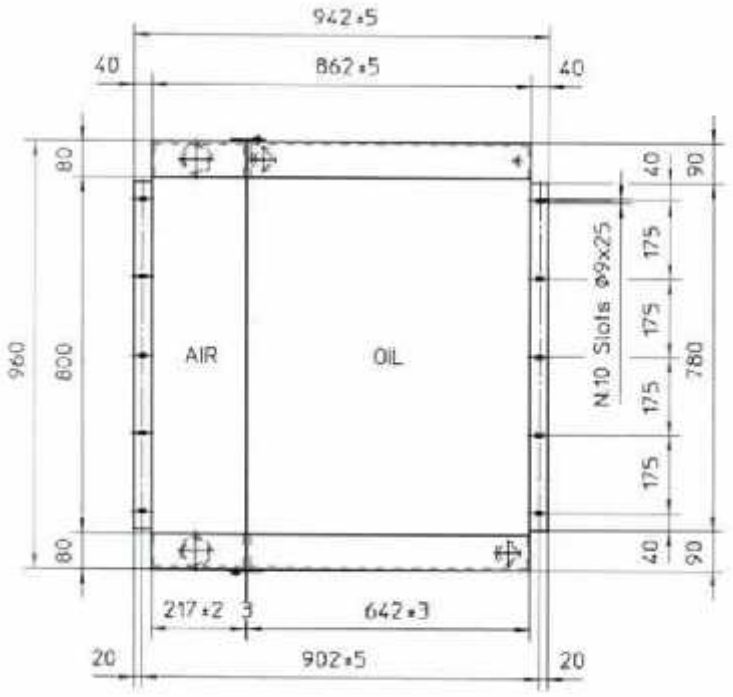

SPECIFICATION		OIL/Air after cooler
Order number		CC07
Technical data(Standard values)		
Compressor driving power	KW/HP	75
Oil cooling power	KW	63
Air cooling power	KW	11
Oil flow	Lit/min	75
Air flow	Nm³/min	11.5
Cooling Air flow	Kg/hr	9,100
Approximate cooler dimensions		
Max working pressure	bar(g)/psig	26
Test Pressure	bar(g)/psig	40
Cooler weight approx.	Kg/lb	88.2
Fan speed	rpm	900
Fan diameter	mm/inch	700
Oil inlet temperature	°C/°F	Max 100
Air inlet temperature	°C/°F	Max 100
Ambient temperature	°C/°F	Max 45

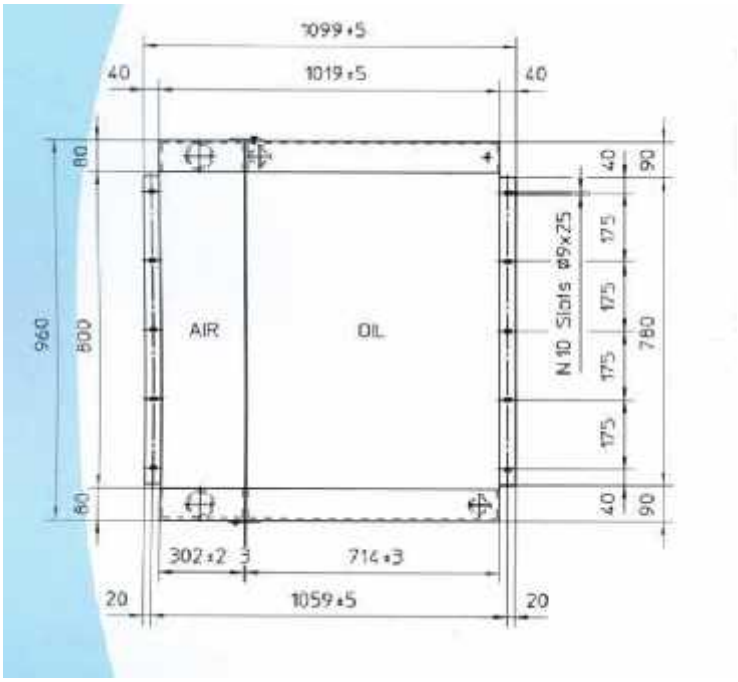

SPECIFICATION		OIL/Air after cooler
Order number		CC08
Technical data(Standard values)		
Compressor driving power	KW/HP	90/110
Oil cooling power	KW	78/94
Air cooling power	KW	14/16
Oil flow	Lit/min	90/110
Air flow	Nm^3/min	14/17
Cooling Air flow	Kg/hr	10,000
Approximate cooler dimensions		
Max working pressure	bar(g)/psig	26
Test Pressure	bar(g)/psig	40
Cooler weight approx.	Kg/lb	106.5
Fan speed	rpm	900
Fan diameter	mm/inch	730
Oil inlet temperature	°C/°F	Max 100
Air inlet temperature	°C/°F	Max 100
Ambient temperature	°C/°F	Max 45